ASSEMBLY INSTRUCTIONS

LB900

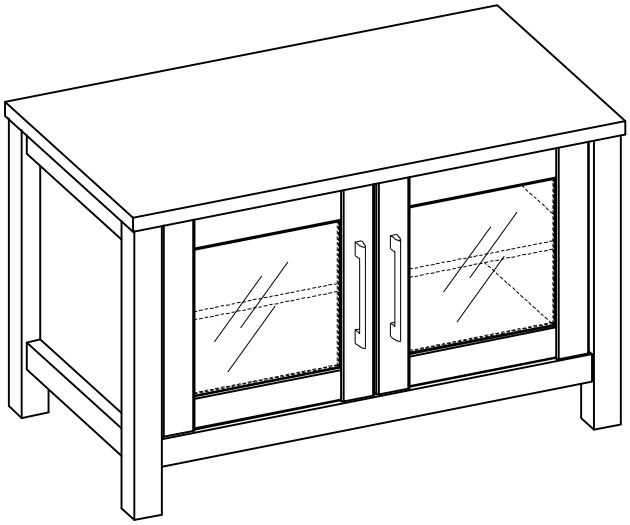

Thank you for choosing AVS LB900 Furniture. Before beginning assembly, please check all parts are included and undamaged. For any assembly or parts enquiries, please contact AV Supply Group Ltd on (09) 2749172 or email to sales@avsupply.co.nz

LB900

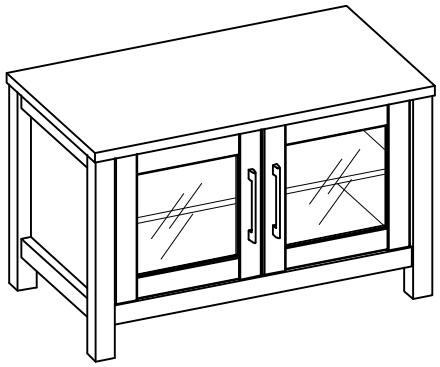

The top shelf supports up to 45 kg (99 lbs.)
The middle shelf supports up to 8 kg (17.6 lbs.)
The lower shelf supports up to 45 kg (99 lbs.)

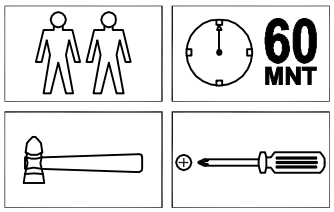

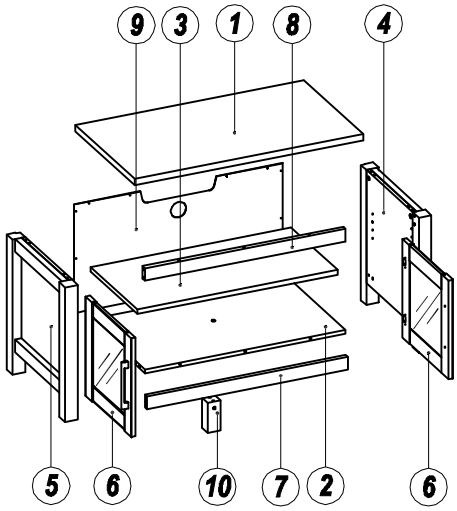

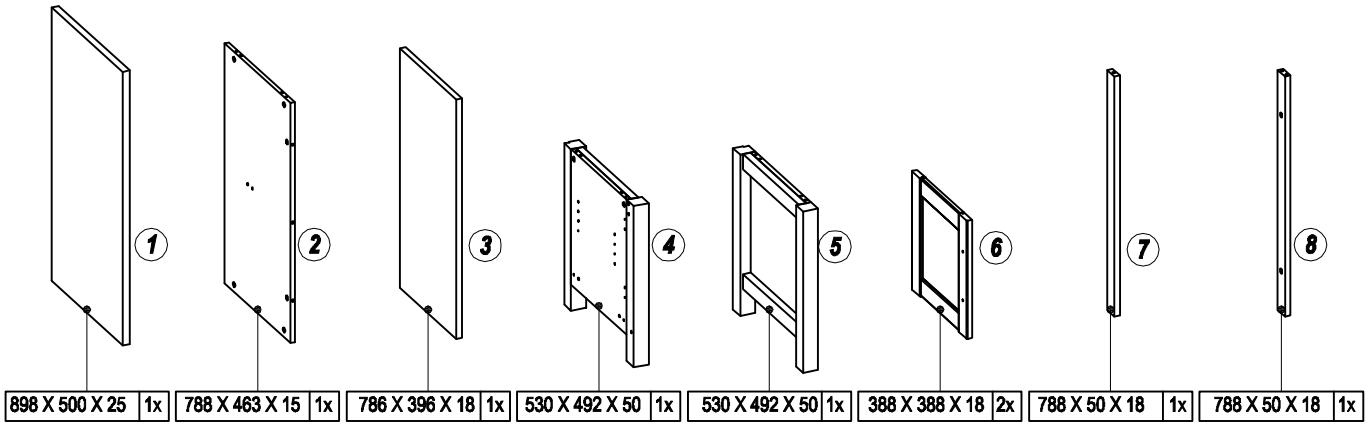

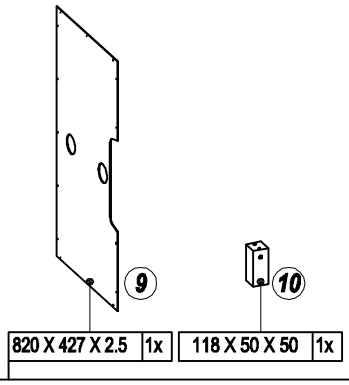

PRODUCT CARE : Care for your furniture by cleaning with Glass cleaner and a disposable Paper towel, do NOT use abrasive chemical products to clean your AVS furniture.

CAUTION : Do not use this product for any purpose not explicitly specified by AVS. Improper installation may cause property damage or personal injury. If you do not understand these directions, or have doubts about the safety of the installation, contact AVS Customer Service or call a qualified contractor. AVS is not responsible for damage or injury caused by incorrect mounting, assembly, or use.

WARNING! This product contains small items that could be a choking hazard if swallowed. Keep these items away from young children !

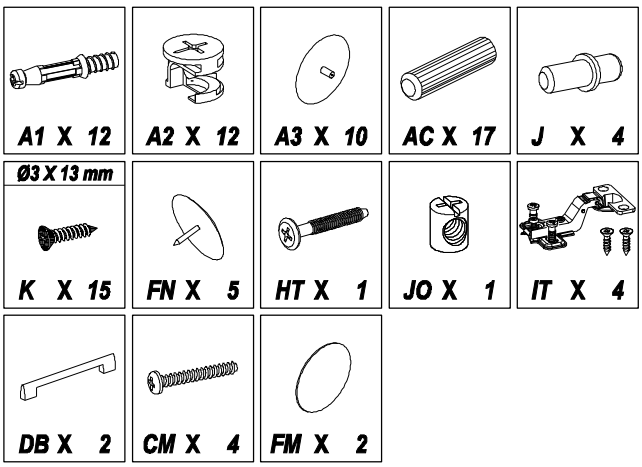

AV Supply Group (AVS) intend to make this manual accurate and complete. However, AVS makes no claim that the information contained herein covers all details, conditions, or variations. Nor does it provide for every possible contingency in connection with the installation or use of this product. The information contained in this document is subject to change without notice or obligation of any kind. AVS makes no representation of warranty, expressed or implied, regarding the information contained herein. AVS assumes no responsibility for accuracy, completeness or sufficiency of the information contained in this document.

LB900

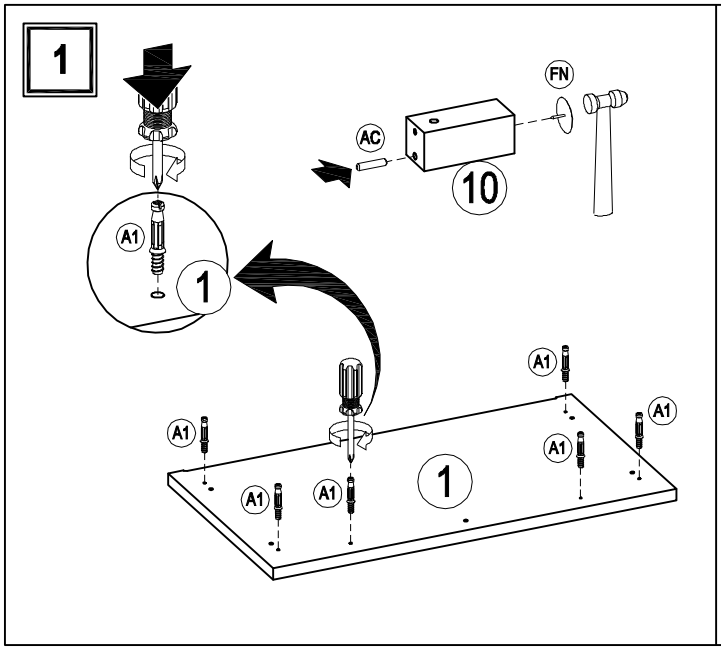
1
FN
AC
10
A1
1
A1
A1
A1
A1
A1
A1
1

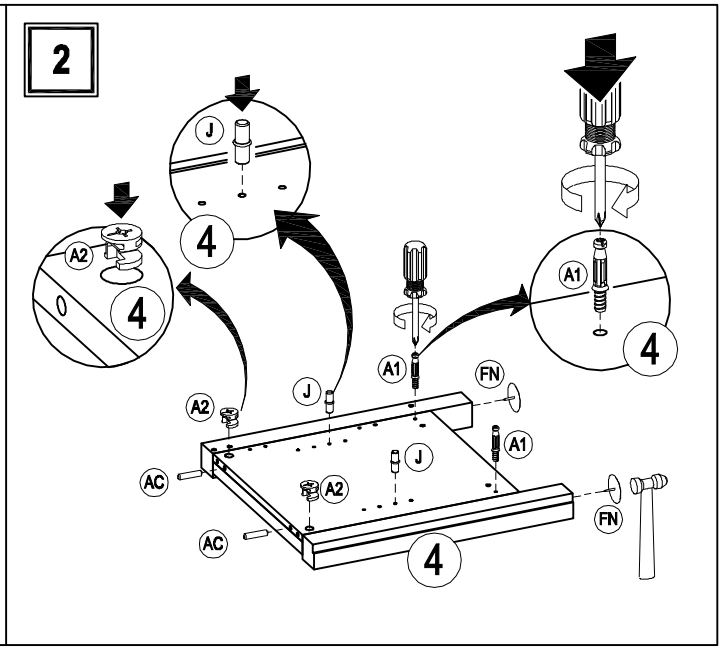
2
J
4
A2
4
A1
4
A1
FN
J
A2
A1
J
AC
A2
FN
AC
4

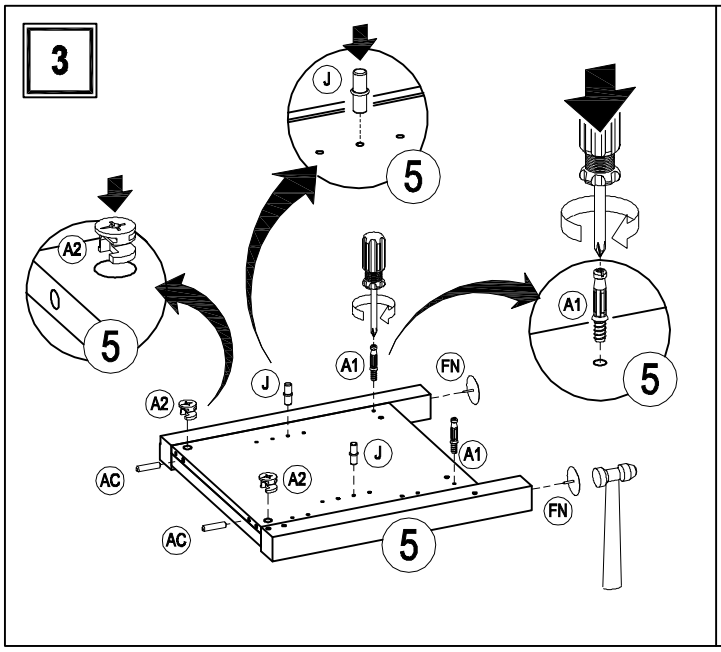
3
J
5
A2
5
A1
5
A1
FN
J
A2
A1
J
AC
A2
FN
AC
5

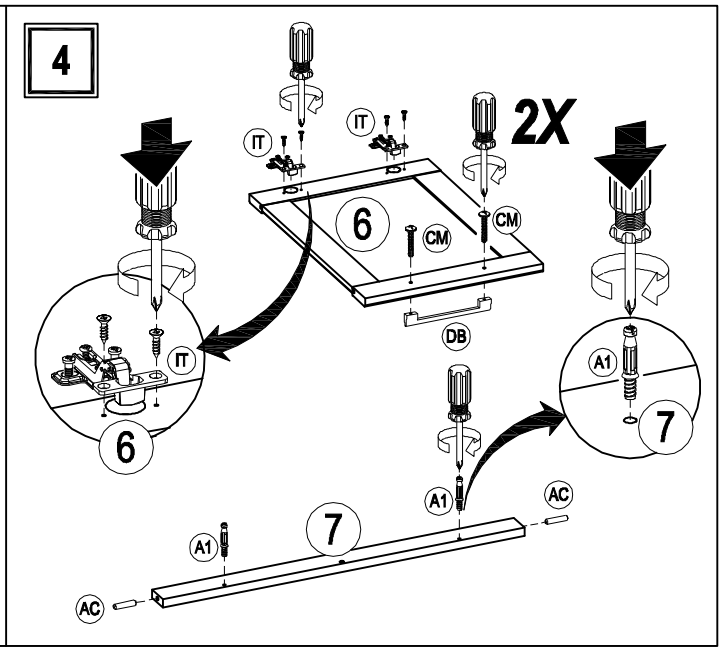
4
2X
IT
IT
6
CM
CM
DB
IT
6
A1
7
A1
AC
7
A1
AC

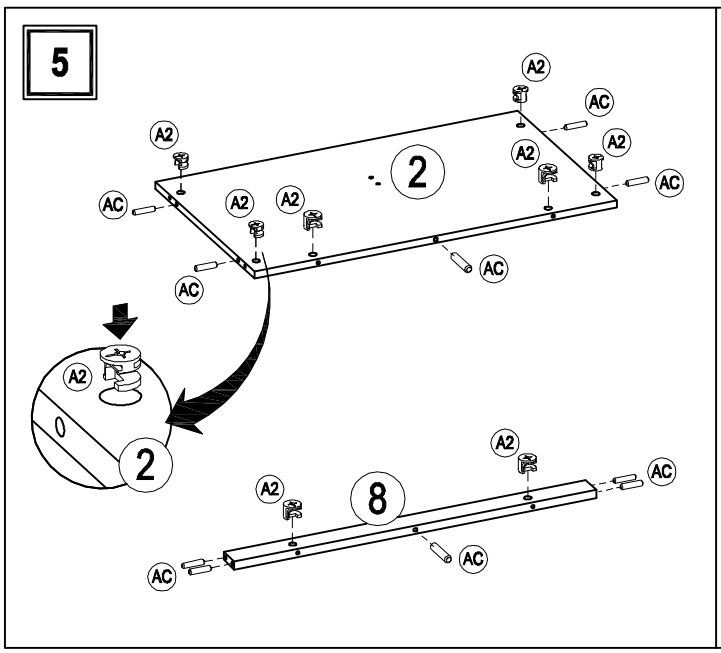
5
A2
AC
A2
A2
2
A2
AC
AC
A2
A2
AC
AC
A2
2
A2
8
A2
AC
AC
AC

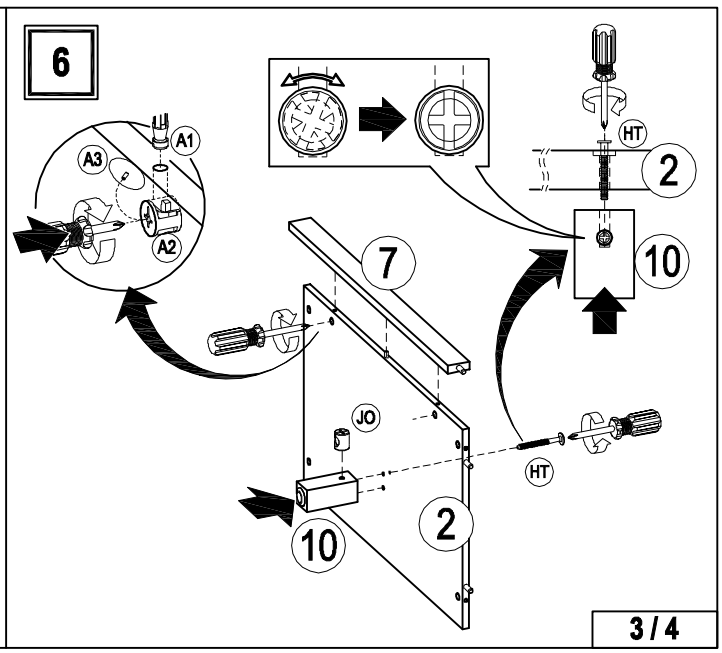
6
A1
A3
A2
HT
2
10
7
JO
HT
10
2

LB900

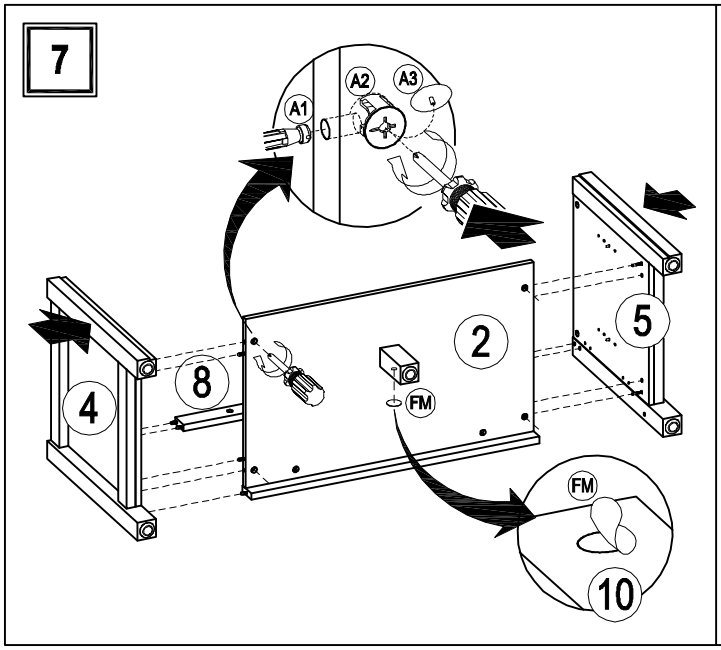
7
A1
A2
A3
4
8
2
5
FM
FM
10

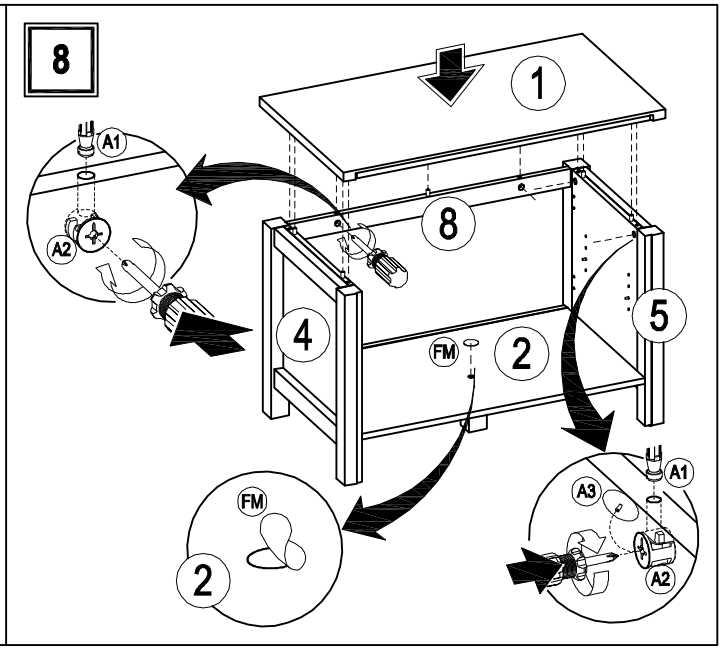
8
1
A1
A2
8
4
FM
2
5
FM
2
A3
A1
A2

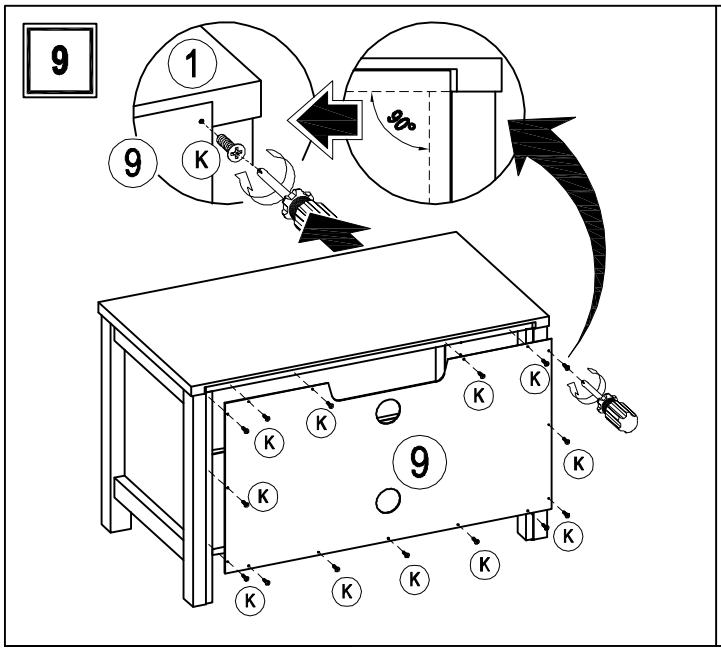
9
1
9
K
90°
K
K
K
K
K
K
9
K
K
K
K
K
K

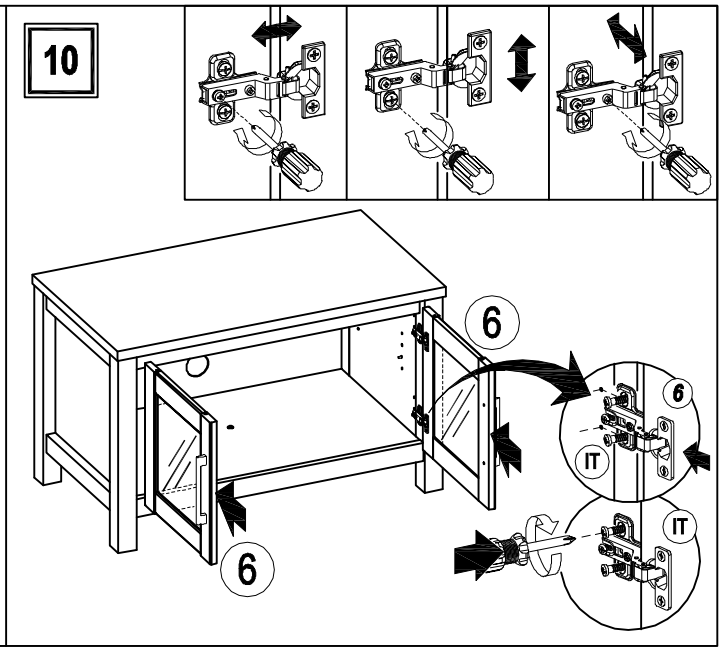
10
6
6
IT
IT
6

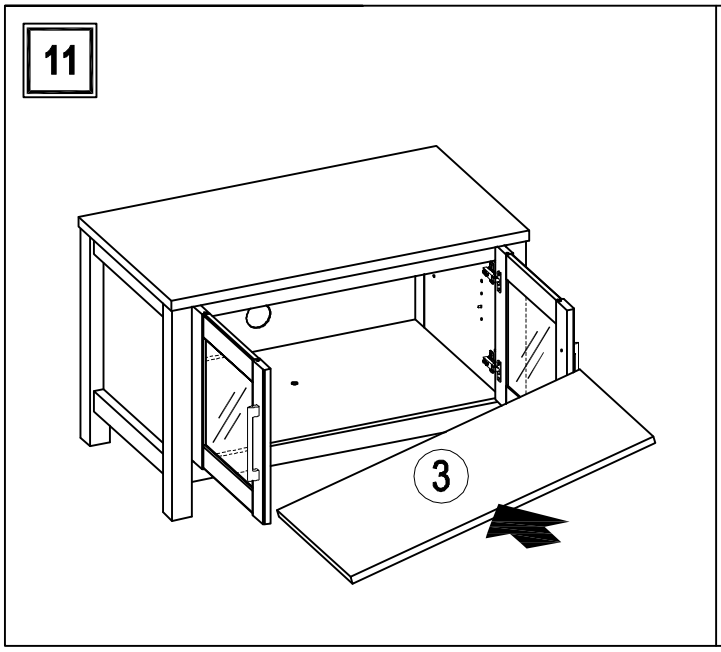
11
3

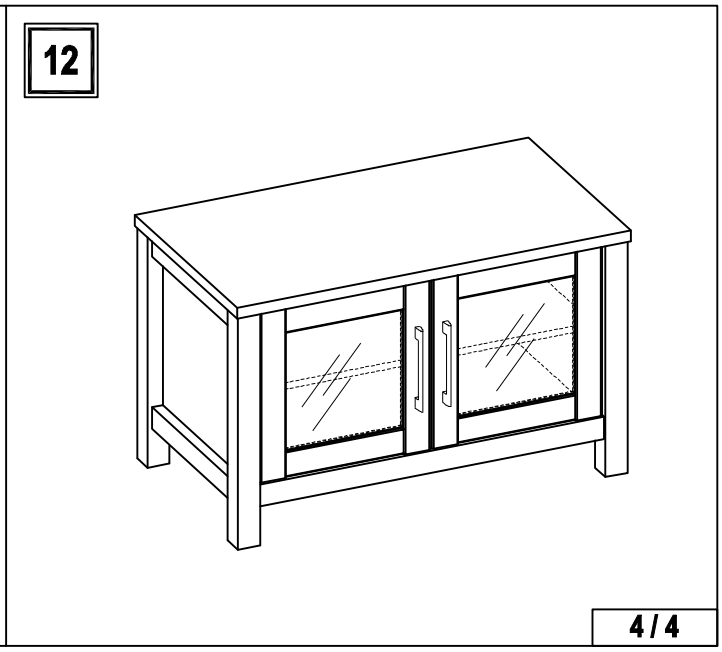
12